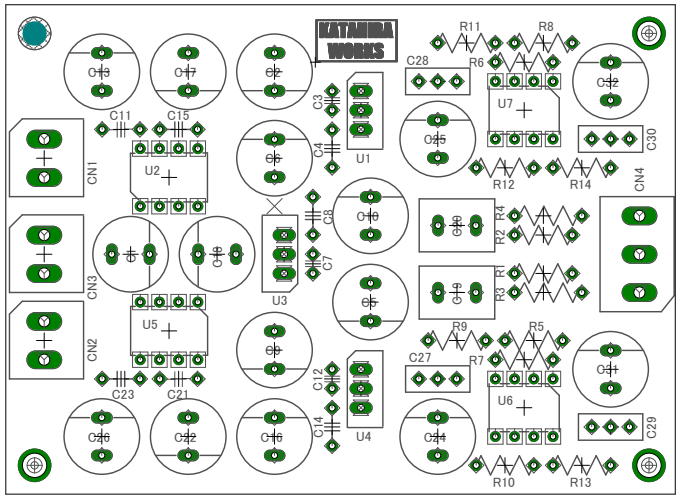
KATAMIRA WORKS
R11
R8
C28
R6
C13
C17
C2
C32
C3
U7
C11
C15
C25
C30
C4
U1
CN1
U2
C6
R12
R14
CN4
C8
C10
C18
R4
R2
C1
C16
C7
R1
R3
CN3
U3
C5
C19
U5
R9
R5
C9
C27
R7
C31
CN2
C12
C23
C21
U6
C26
C22
C16
C14
U4
C24
C29
R10
R13