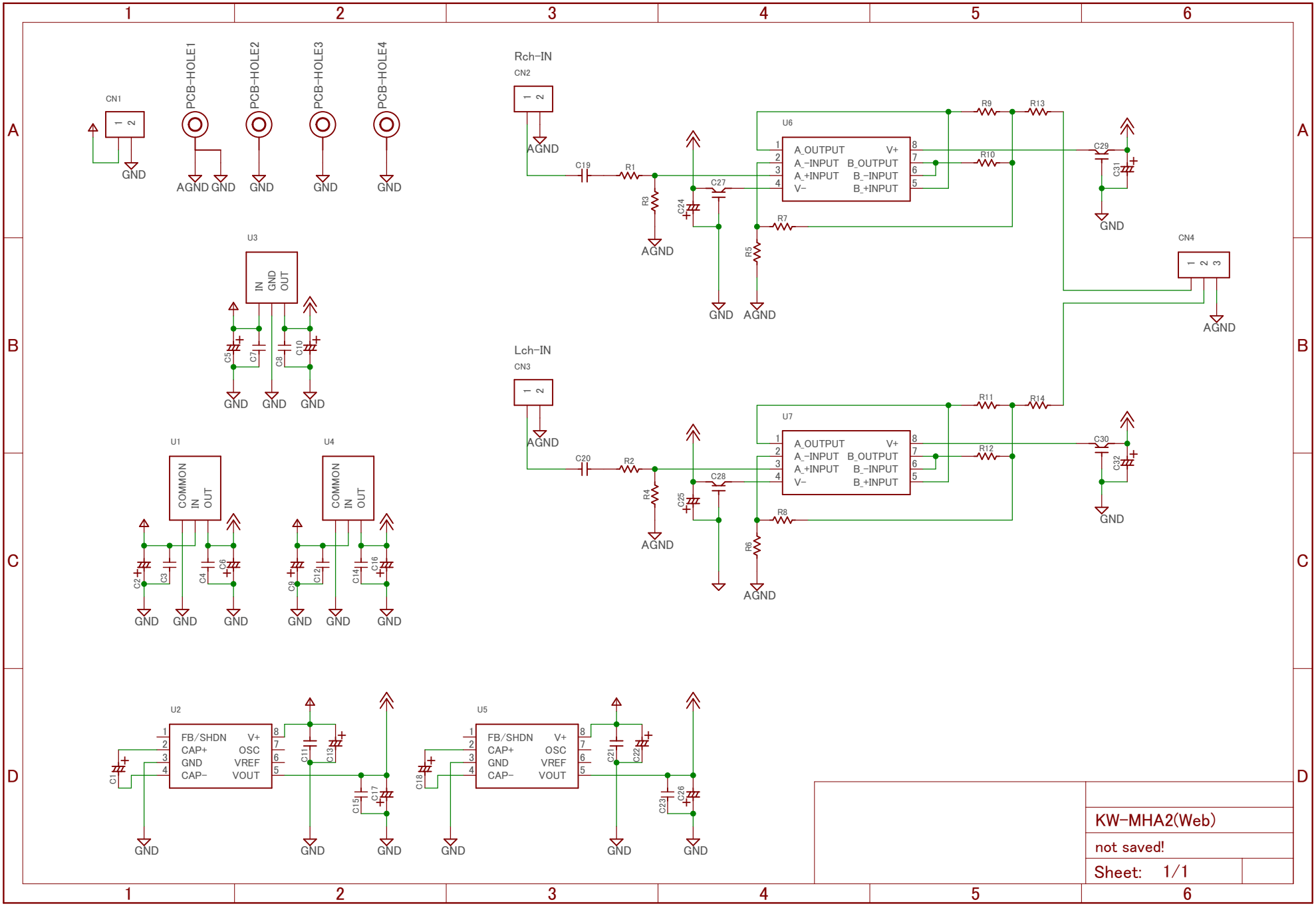
CN1
PCB-HOLE1
PCB-HOLE2
PCB-HOLE3
PCB-HOLE4
GND
AGND
Rch-IN
CN2
Lch-IN
CN3
CN4
U1
COMMON
IN
OUT
U2
FB/SHDN
CAP+
GND
CAP-
V+
OSC
VREF
VOUT
U3
IN
GND
OUT
U4
U5
U6
A_OUTPUT
A_-INPUT
A_+INPUT
V-
B_OUTPUT
B_-INPUT
B_+INPUT
U7
KW-MHA2(Web)
not saved!
Sheet: 1/1